OWNER'S MANUAL

LED LCD MONITOR

(LED Monitor*)

* LG LED Monitor applies LCD screen with LED backlights.

Please read this manual carefully before operating your set and retain it for future reference.

29U531A
29U511A
34U511A
34U530A
34BF550B
29BF550B

www.lg.com

Copyright © 2025 LG Electronics Inc. All Rights Reserved.

TABLE OF CONTENTS

LICENSE 2

ASSEMBLING AND PREPARING 3

USING THE MONITOR..... 11

USER SETTINGS 13

TROUBLESHOOTING 24

PRODUCT SPECIFICATION..... 26

LICENSE

Each model has different licenses. Visit *www.lg.com* for more information on the license.

The terms HDMI, HDMI High-Definition Multimedia Interface, HDMI trade dress and the HDMI Logos are trademarks or registered trademarks of HDMI Licensing Administrator, Inc.

29U531A **34U530A** **34BF550B** **29BF550B**

MaxxAudio and additional MAXX trademarks are trademarks and/or registered trademarks of Waves Audio Ltd.

34U530A

VESA, VESA logo, DisplayPort compliance logo and DisplayPort compliance logo for dual-mode source devices are all registered trademarks of the Video Electronics Standards Association.

ASSEMBLING AND PREPARING

CAUTION

- Always use genuine LG components to ensure safety and product performance.
- The product warranty will not cover damage or injury caused by the use of unauthorized components.
- It is recommended that use the supplied components.
- If you use generic cables not certified by LG, the screen may not display or there may be image noises.
- Illustrations in this document represent typical procedures, so they may look different from the actual product.
- Do not apply foreign substances (oils, lubricants, etc.) to the screw parts when assembling the product. (Doing so may damage the product.)
- Applying excessive force when tightening screws may cause damage to the monitor. Damage caused in this way will not be covered by the product warranty.
- Do not carry the monitor upside down by just holding the base. This may cause the monitor to fall off the stand and could result in personal injury.
- When lifting or moving the monitor, do not touch the monitor screen. The force applied to the monitor screen may cause damage to it.
- For wave pattern on appearance, unlike the general method of coating, it's applied to added glittering material in raw material.With no peeled-off appearance, it has good durability. Please use it with confidence because there is no problem in using the product at all.

NOTE

- The components may look different from those illustrated here.
- Without prior notice, all product information and specifications contained in this manual are subject to change to improve the performance of the product.
- To purchase optional accessories, visit an electronics store or an online shopping site, or contact the retailer from which you purchased the product.
- The power cord provided may differ depending upon the region.

Supported Drivers and Software

You can download and install the latest version from the LGE website (*www.lg.com*).

Drivers and Software	Installation Priority
Monitor Driver	Optional
LG Switch	Recommended
Dual Controller	Optional

Product and Button Description

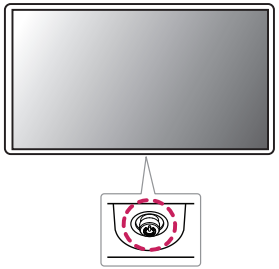

How to Use the Joystick Button

You can easily control the functions of the monitor by pressing the joystick button or moving it left/right/up/down with your finger.

Basic Functions

		**Power on**	Press the joystick button once with your finger to turn on the monitor.
		**Power off**	Press and hold the joystick button once more than 3 seconds with your finger to turn off the monitor.
	◄/►	**Volume control**	You can control the volume by moving the joystick button left/right.

NOTE

- The joystick button is located at the bottom of the monitor.

Moving and Lifting the Monitor

When moving or lifting the monitor, follow these instructions to prevent the monitor from being scratched or damaged and to ensure safe transportation, regardless of its shape or size.

- Place the monitor in the original box or packing material before attempting to move it.
- Before moving or lifting the monitor, disconnect the power cord and all other cables.
- Hold the bottom and side of the monitor frame firmly. Do not hold the panel itself.
- When holding the monitor, the screen should face away from you to prevent it from being scratched.
- When transporting the monitor, do not expose the monitor to shock or excessive vibration.
- When moving the monitor, keep it upright and never turn the monitor on its side or tilt it sideways.

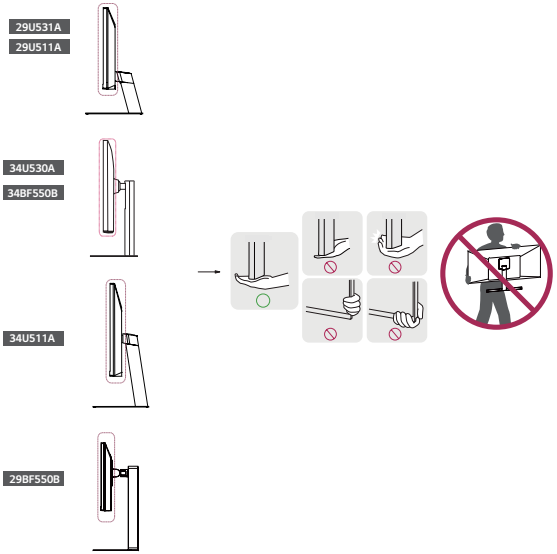

CAUTION

- Avoid touching the monitor screen as much as possible.
  - This may result in damage to the screen or some of the pixels used to create images.
- If you use the monitor panel without the stand base, its joystick button may cause the monitor to become unstable and fall, resulting in damage to the monitor or human injury. In addition, this may cause the joystick button to malfunction.

Installing on a Table

- Lift the monitor and place it on the table in an upright position. Place the monitor at least 100 mm away from the wall to ensure sufficient ventilation.

29U531A **29U511A**

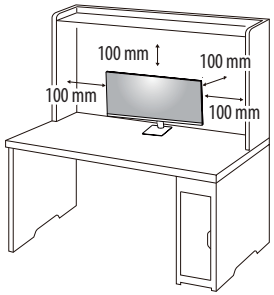

34U530A **34BF550B** **29BF550B**

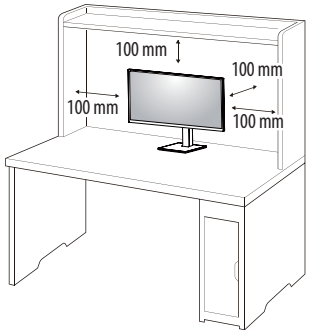

34U511A

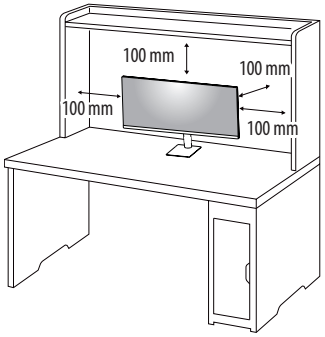

CAUTION

- Unplug the power cord before moving or installing the monitor. There is risk of electric shock.
- Make sure to use the power cord that is provided in the product package and connect it to a grounded power outlet.
- If you need another power cord, please contact your local dealer or the nearest retail store.

Adjusting the Stand Height

1. Place the monitor mounted on the stand base in an upright position.
2. Handle the monitor with both hands for safety.

34U530A
34BF550B
29BF550B

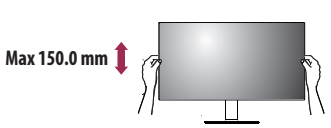

WARNING

- When adjusting the screen height, do not place your hand on the stand body to avoid injury to your fingers.

Adjusting the Angle

1 Place the monitor mounted on the stand base in an upright position.

2 Adjust the angle of the screen.

29U531A **29U511A** **34U511A**

The angle of the screen can be adjusted forward or backward from -5° to 15° for a comfortable viewing experience.

34U530A **34BF550B** **29BF550B**

The angle of the screen can be adjusted forward or backward from -5° to 21° for a comfortable viewing experience.

WARNING

- To avoid injury to the fingers when adjusting the screen, do not hold the lower part of the monitor's frame as illustrated below.
- Be careful not to touch or press the screen area when adjusting the angle of the monitor.

29U531A
29U511A



34U530A
34BF550B

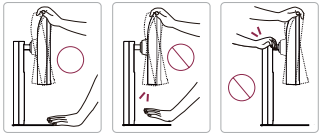

34U511A



29BF550B

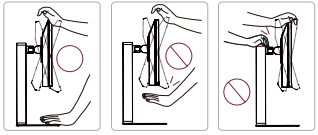

Swivel stand (34U530A/34BF550B/29BF550B)

- Image shown may differ from your Monitor set.

1 Swivel ±30 degrees and adjust the angle of the Monitor set to suit your view.

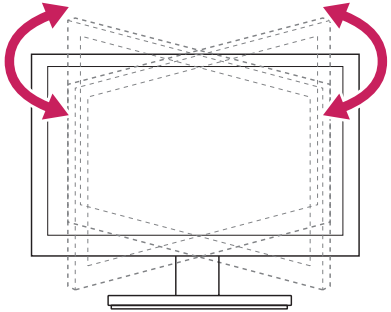

Using the Kensington Lock

The connector for the Kensington security system is located at the bottom of the monitor.

For more information on installation and usage, refer to the Kensington lock owner's manual or visit the website at *http://www.kensington.com*.

Connect the monitor to a table using the Kensington security system cable.

29U531A
29U511A

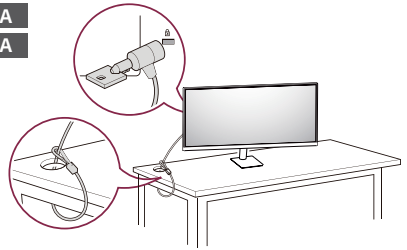

34U530A
34BF550B
29BF550B

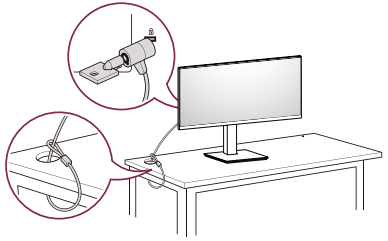

34U511A

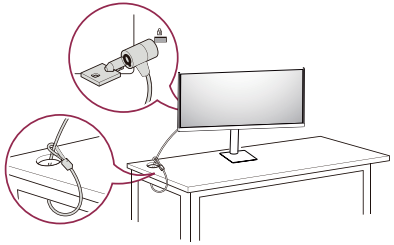

NOTE

- The Kensington security system is optional. You can obtain optional accessories from most electronics stores.

Installing the Wall Mount Plate

This monitor meets the specifications for the wall mount plate or other compatible devices.

NOTE

- The wall mount plate is sold separately.
- For more information on installation, refer to the wall mount plate's installation guide.
- Be careful not to apply too much force while mounting the wall mount plate as it may cause damage to the screen.
- Remove the stand before installing the monitor on a wall mount by performing the stand attachment in reverse.

Installing on the Wall

Install the monitor at least 100 mm away from the wall and leave about 100 mm of space at each side of the monitor to ensure sufficient ventilation. Detailed installation instructions can be obtained from your local retail store. Alternatively, please refer to the manual for how to install and set up a tilting wall mounting bracket.

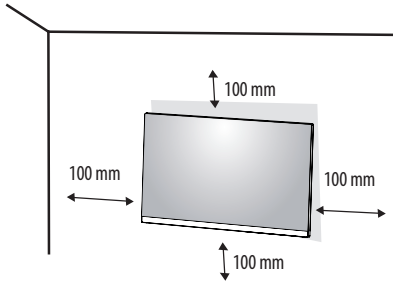

To install the monitor to a wall, attach a wall mounting bracket (optional) to the back of the monitor.
Make sure that the wall mounting bracket is securely fixed to the monitor and to the wall.

Wall Mount (mm)	100 x 100
Standard screw	M4 x L10
Number of screws	4
Wall Mount Plate (Optional)	LSW 149 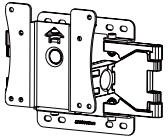

NOTE

- A non-VESA standard screw may damage the product and cause the monitor to fall. LG Electronics is not liable for any accidents relating to the use of non-standard screws.
- The wall mount kit includes the installation guide and all necessary parts.
- The wall mounting bracket is optional. You can obtain optional accessories from your local dealer.
- The length of the screw may differ for each wall mounting bracket. If you use screws longer than the standard length, it may damage the inside of the product.
- For more information, please refer to the user manual for the wall mounting bracket.

⚠ CAUTION

- Unplug the power cord before moving or installing the monitor to avoid electric shock.
- Installing the monitor on the ceiling or on a slanted wall may result in the monitor falling off, which could lead to injury. Use an authorized LG wall mount and contact the local dealer or qualified personnel.
- Applying excessive force when tightening screws may cause damage to the monitor. Damage caused in this way will not be covered by the product warranty.
- Use the wall mounting bracket and screws that conform to VESA standards. Damage caused by the use or misuse of inappropriate components will not be covered by the product warranty.
- When measured from the back of the monitor, the length of each installed screw must be 8 mm or less.

USING THE MONITOR

- Illustrations in this manual may differ from the actual product.

Press the joystick button, go to **Settings** → **Input**, and then select the input option.

CAUTION

- Do not press the screen for a prolonged time. This may cause image distortion.
- Do not display a still image on the screen for a prolonged time. This may cause image retention. Use a PC screensaver if possible.
- When connecting the power cord to the outlet, use a grounded (3-hole) power strip or a grounded power outlet.
- The monitor may flicker when turned on in an area where the temperature is low. This is normal.
- Sometimes red, green, or blue spots may appear on the screen. This is normal.

Connecting to a PC

- This monitor supports the *Plug and Play feature.

* Plug and Play: A feature that allows you to add a device to your computer without having to reconfigure anything or install any manual drivers.

HDMI Connection

Transmits digital video and audio signals from your PC to the monitor.

CAUTION

- Using a DVI to HDMI / DP (DisplayPort) to HDMI cable may cause compatibility issues.
- Use a certified cable with the HDMI logo attached. If you do not use a certified HDMI cable, the screen may not display or a connection error may occur.
- Recommended HDMI cable types
  - High-Speed HDMI®/™ cable
  - High-Speed HDMI®/™ cable with Ethernet

DisplayPort Connection

Transmits digital video and audio signals from your PC to the monitor.

NOTE

- There may be no video or audio output depending on the DP (DisplayPort) version of the PC.
- If you are using a Mini DisplayPort output graphics card, use a Mini DP to DP (Mini DisplayPort to DisplayPort) cable or gender that supports DisplayPort1.4. (Sold separately)

USB-C connection

Transmits digital video and audio signals from your PC to the monitor.

NOTE

- DP Alternate Mode (DP over USB-C) are supported via USB-C Port.
- Features may not work properly depending on the connected device's specifications and the environment.
- USB-C port is not for the Monitor Power source.
  Connect Adapter to supply power to the Monitor

Connecting AV Devices

HDMI Connection

HDMI transmits digital video and audio signals from your AV device to the monitor.

NOTE

- Using a DVI to HDMI / DP (DisplayPort) to HDMI cable may cause compatibility issues.
- Use a certified cable with the HDMI logo attached. If you do not use a certified HDMI cable, the screen may not display or a connection error may occur.
- Recommended HDMI cable types
  - High-Speed HDMI®/™ cable
  - High-Speed HDMI®/™ cable with Ethernet

Connecting Peripherals

Headphones Connection

Connect peripherals to the monitor via the headphones port.

NOTE

- Peripheral devices are sold separately.
- Depending on the audio settings of the PC and external device, headphones and speaker functions may be limited.
- If you use angled earphones, it may cause a problem with connecting another external device to the monitor. Therefore, it is recommended to use straight earphones.



Angled



Straight
(Recommend)

USER SETTINGS

NOTE

- Your monitor's OSD (On Screen Display) may differ slightly from that shown in this manual.

Activating the Main Menu

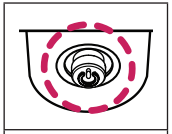

Joystick Button

1. Press the joystick button on the bottom of the monitor.
2. Move the joystick up/down and left/right to set the options.
3. Press the joystick button once more to exit the main menu.

Button	Menu Status		Description
	**Main menu disabled**		Enables the main menu.
	Main menu enabled		Exits the main menu. (Holding down the button more than 3 seconds to turn off the monitor. You can turn off the monitor this way at any time, including when the OSD is on.)
	◄	**Main menu disabled**	Adjusts the monitor volume level.
		Main menu enabled	Enters the **Input** features.
	►	**Main menu disabled**	Adjusts the monitor volume level.
		Main menu enabled	Enters the **Settings** feature.
	▲	**Main menu disabled**	Displays the information on the current input.
		Main menu enabled	Turns off the monitor.
	▼	**Main menu disabled**	Displays the information on the current input.
		Main menu enabled	Enters the **Picture Mode** feature.

Main Menu Features

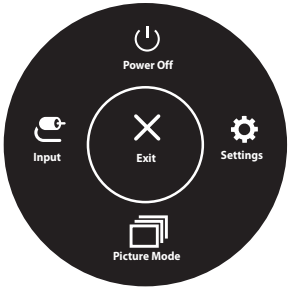

Main Menu	Description
Input	Sets input mode.
Power Off	Turns off the monitor.
Settings	Configures the screen settings.
Picture Mode	Sets the picture mode.
Exit	Exits the main menu.

Menu Settings

1 To view the OSD menu, press the joystick button at the bottom of the monitor and then enter the **Settings**.
2 Move the joystick up/down and left/right to set the options.
3 To return to the upper menu or set other menu items, move the joystick to ◀ or pressing (☝) it.
4 If you want to exit the OSD menu, move the joystick to ◀ until you exit.

29U531A/34U530A/34BF550B
/29BF550B



Quick Settings **Input** **Picture** **Sound** **General**

Quick Settings

Settings > Quick Settings	Description	
Brightness	Adjusts the contrast and brightness of the screen.	
Contrast		
Volume	Adjusts the volume level. **NOTE** • You can adjust **Mute** / **Unmute** by moving the joystick button to ▼ in the **Volume** menu.	
Color Temp	**Custom**	The user can adjust it to red, green, or blue by customization.
	Warm	Sets the screen color to a reddish tone.
	Medium	Sets the screen color to between a red and blue tone.
	Cool	Sets the screen color to a bluish tone.
	Manual	The user can fine-tune the color temperature.
Waves MaxxAudio® (29U531A/34U530A/34BF550B /29BF550B)	**On**	MaxxAudio® by Waves, recipient of a Technical GRAMMY Award® is a suite of studio-quality sound tools for a superior listening experience.
	Off	Disables the MaxxAudio function.

Input

Settings > Input	Description	
Input List	Selects the input mode.	
Aspect Ratio	Adjusts the aspect ratio of the screen.	
	Full Wide	Displays the video in widescreen, regardless of the video signal input.
	Original	Displays video according to the aspect ratio of the video signal input.
	Cinema 1	Enlarges the screen with an aspect ratio of 21:9.
	Cinema 2	Enlarges the screen with an aspect ratio of 21:9, including the black box at the bottom for subtitles.
Auto Input Switch	When automatic input switch is set to **On**, display will automatically switch to new input when connected.	
	On	Enables **Auto Input Switch**.
	Off	Disables **Auto Input Switch**.

Picture

NOTE

- The **Picture Mode** that can be set depends on the Input signal.

Settings > Picture	Description		SDR signal	HDR signal
Picture Mode	**Custom**	Allows the user to adjust each element.	0	0
	Vivid	Heightens contrast, brightness and sharpness to display vivid images.	0	0
	HDR Effect	Optimizes the screen for high dynamic range.	0	X
	Reader	Optimizes the screen for reading documents. You can brighten the screen in the OSD menu.	0	X
	Cinema	Optimizes the screen to improve the visual effects of a video.	0	0
	FPS	This mode is optimized for FPS games.	0	0
	RTS	This mode is optimized for RTS Game.	0	0
	Color Weakness	This mode is for users who cannot distinguish between red and green. It enables users with color weakness to easily distinguish between the two colors.	0	X
	NOTE • If the **picture mode** is changed, the screen may flicker or the resolution of your PC screen may be affected.			

Settings > Picture	Description		
Picture Adjust	**Brightness**	Adjusts the color contrast and brightness of the screen.	
	Contrast		
	Sharpness	Adjusts the sharpness of the screen.	
	SUPER RESOLUTION+	**High**	Optimizes the screen for crystal clear images. Best for high-definition video or games.
		Middle	Optimizes the screen for comfortable viewing, with images at the middle level between the low and high modes. Best for UCC or SD videos.
		Low	Optimizes the screen for smooth and natural images. Best for still images or images with less movement.
		Off	Displays in the most common setting. Disables **SUPER RESOLUTION+**.
		NOTE • Because this is a function to increase the sharpness of low resolution pictures, it is not recommended to use the function for normal text or for desktop icons. Doing so may result in unnecessarily high sharpness.	
	Black Level	Sets the offset level (for HDMI only). • Offset: as a reference for a video signal, this is the darkest color the monitor can display.	
		High	Keeps the current contrast ratio of the screen.
		Low	Lowers the black levels and raises the white levels from the current contrast ratio of the screen.
	DFC	**On**	Adjusts the brightness automatically according to the screen.
		Off	Disables the **DFC** feature.

Settings > Picture	Description		
Game Adjust	**Response Time**	Sets a response time for displayed pictures based on the movement of the picture on the screen. For a normal environment, it is recommended that you use **Fast**. When there is a lot of motion, it is recommended that you use **Faster**. Setting to Faster may cause image sticking.	
		Faster	Sets the response time to Faster.
		Fast	Sets the response time to Fast.
		Normal	Sets the response time to Normal.
		Off	Does not use the response time improvement feature.
	Black Stabilizer	You can control the black contrast to have better visibility in dark scenes. Increasing the **Black Stabilizer** value brightens the low gray level area on the screen. (You can easily distinguish objects on dark game screens.) Reducing the **Black Stabilizer** value darkens the low gray level area and increases the dynamic contrast on the screen.	

<table>
<tr><th>Settings > Picture</th><th colspan="2">Description</th></tr>
<tr><td rowspan="4">Game Adjust</td><td rowspan="3">1ms Motion Blur Reduction</td><td>On</td><td>This mode minimizes motion blur in fast-moving videos.
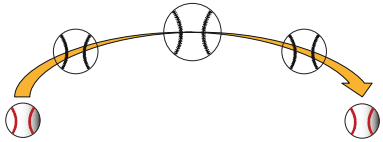
This function is available for the following vertical frequency. (75Hz)</td></tr>
<tr><td>Off</td><td>Turns 1ms Motion Blur Reduction Mode off.
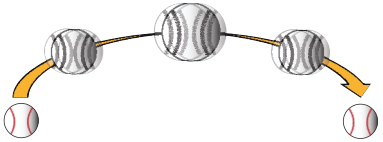</td></tr>
<tr><td colspan="2">NOTE
• To reduce motion blur, brightness is reduced with backlight control.
• This function is game-optimized.
• It is recommended to turn off when you are not using the gaming function.
• Flicker may occur during 1ms Motion Blur Reduction operation.</td></tr>
<tr><td>Crosshair</td><td colspan="2">Crosshair provides a mark on the center of the screen for First Person Shooter (FPS) games. Users can select the Crosshair that fits their gaming environment among four different Crosshairs.
• When the monitor is off or enters energy saving mode, the Crosshair feature is automatically turned Off.</td></tr>
</table>

Settings > Picture	Description			
Color Adjust	**Gamma**	**Mode 1, Mode 2, Mode 3**	The higher the gamma value, the darker the image becomes. Likewise, the lower the gamma value, the lighter the image becomes.	
		Mode 4	If you do not need to adjust the gamma settings, select **Mode 4**.	
	Color Temp	Set your own color temperature.		
		Custom	The user can adjust it to red, green, or blue by customization.	
		Warm	Sets the screen color to a reddish tone.	
		Medium	Sets the screen color to between a red and blue tone.	
		Cool	Sets the screen color to a bluish tone.	
		Manual	The user can fine-tune the color temperature.	
	Red, Green, Blue	You can customize the picture color using **Red**, **Green**, and **Blue** colors.		
	Six Color	Meets the user requirements for colors by adjusting the hue and saturation of the six colors (red, green, blue, cyan, magenta, and yellow) and then saving the settings.		
		Hue	Adjusts the tone of the screen colors.	
		Saturation	Adjusts the saturation of the screen colors. The lower the value, the less saturated . The higher the value, the more saturated .	
Picture Reset	**Do you want to reset your picture settings?**		**Yes**	Returns to the default settings.
			No	Cancel the select.

Settings > Sound (29U531A/34U530A/34BF550B /29BF550B)	Description	
Volume	To adjust the Volume of headphone or speaker.	
Waves MaxxAudio®	**On**	MaxxAudio® by Waves, recipient of a Technical GRAMMY Award® is a suite of studio-quality sound tools for a superior listening experience.
	Off	Disables the MaxxAudio function.

General

Settings > General	Description	
Language	Sets the menu screen to the desired language.	
SMART ENERGY SAVING	Conserve energy by using luminance compensation algorithm.	
	High	Saves energy using the high-efficiency **SMART ENERGY SAVING** feature.
	Low	Saves energy using the low-efficiency **SMART ENERGY SAVING** feature.
	Off	Disables the feature.
	NOTE • The value of energy saving data may differ depending on panel and panel suppliers. • If you select the option of **SMART ENERGY SAVING** is **High** or **Low**, monitor luminance become lower or higher depend on source.	
Power LED	**On**	The power LED turns on.
	Off	The power LED turns off.
Automatic Standby	Feature that automatically turns off the monitor when there is no movement on the screen for a period of time. You can set a timer for the auto-off function. (**8H, 6H, 4H** and **Off**)	
DisplayPort Version	Set DisplayPort Version to the same version as the connected external device. (**1.4**, **1.2**, and **1.1**) To use the HDR function, set to **1.4**.	
Buzzer (29U531A/34U530A/34BF550B /29BF550B)	This feature lets you set the sound generated from Buzzer when your monitor powers on.	
	On	Enables your monitor's **Buzzer**.
	Off	Disables your monitor's **Buzzer**.
OSD Lock	This feature disables the configuration and adjustment of menus.	
	On	Enables **OSD Lock**.
	Off	Disables **OSD Lock**.
	NOTE • All features are disabled except Brightness, Contrast, Volume, Input, OSD Lock, Information.	

Settings > General	Description		
Deep Sleep Mode	When Deep Sleep Mode is On, power consumption is minimized while the monitor is in standby mode.		
	On	Enables **Deep Sleep Mode**.	
	Off	Disables **Deep Sleep Mode**.	
Information	The following display information will be shown; **Total Power On Time**, **Resolution**.		
Reset to Initial Settings	**Do you want to reset your settings?**	**Yes**	Returns to the default settings.
		No	Cancel the reset.

TROUBLESHOOTING

Nothing is displayed on the screen.	
Is the monitor's power cord plugged in?	• Check if the power cord is correctly plugged into the power outlet.
Is the power LED on?	• Check the power cable connection and press the power button.
Is the power on and the power LED displaying white?	• Check that the connected input is enabled (**Settings** > **Input**).
Is the **No Signal** message being displayed?	• This is displayed when the signal cable between the PC and the monitor is missing or disconnected. Check the cable and reconnect it.
Is the **Out of Range** message being displayed?	• This occurs when signals transferred from the PC (graphics card) are out of the horizontal or vertical frequency range of the monitor. Please see the Product Specification section of this manual to set the appropriate frequency.
Screen display is unstable and shaky. / Images displayed on the monitor leave shadow trails.	
Did you select the appropriate resolution?	• If the selected resolution is HDMI 1080i 60/50 Hz (interlaced), the screen may be flickering. Change the resolution to 1080p or the recommended resolution. • Not setting the graphics card to the recommended (optimal) resolution may result in blurred text, a dimmed screen, a truncated display area or misalignment of the display. • The setting methods may be different depending on the computer or operating system, and some resolutions may not be available depending on the performance of the graphics card. If this is the case, contact the manufacturer of the computer or graphics card for assistance.
Does image sticking occur even when the monitor is turned off?	• Displaying a still image for a prolonged time may cause damage to the screen, resulting in the retention of the image. • To extend the lifetime of the monitor, use a screensaver.
Are there spots on the screen?	• When using the monitor, pixilated spots (red, green, blue, white, or black) may appear on the screen. This is normal for an LCD screen. It is not an error, nor is it related to the monitor's performance.
Some features are disabled.	
Are some functions not available when you press the Menu button?	• The OSD is locked. Disable **OSD Lock** in **General**.

Do you see an "Unrecognized monitor, Plug and Play (VESA DDC) monitor found" message?	
Have you installed the display driver?	• Be sure to install the display driver from our web site: *http://www.lg.com*. • Make sure to check if the graphics card supports Plug and Play function.
No sound from the headphone port.	
Are images displayed without sound?	• Make sure that the headphone port connections are made properly. • Try increasing the volume with the joystick. • Set the audio output of the PC to the monitor you are using. (The settings may differ depending on the operating system (OS) you use.)

PRODUCT SPECIFICATION

29U531A **29BF550B**

Color Depth	8-bit / 10-bit color is supported.		
Resolution	Max Resolution	2560 x 1080 @ 100 Hz	
	Recommended Resolution	2560 x 1080 @ 60 Hz	
Power Sources	Power Rating	19 V ⎓ 1.7 A	
AC/DC Adapter	ADS-45SQ-19-3 19032E, manufactured by SHENZHEN HONOR ELECTRONIC Or ADS-45FSQ-19 19032EPG-1, manufactured by SHENZHEN HONOR ELECTRONIC Or ADS-45FSQ-19 19032EPK-1, manufactured by SHENZHEN HONOR ELECTRONIC Or ADS-45FSQ-19 19032EPCU-1, manufactured by SHENZHEN HONOR ELECTRONIC Or ADS-45FSQ-19 19032EPBR-1, manufactured by SHENZHEN HONOR ELECTRONIC Or ADS-45FSQ-19 19032EPI-1, manufactured by SHENZHEN HONOR ELECTRONIC Or AD10550LF, manufactured by PI Electronics (H.K.) Ltd. Or AD2138S20, manufactured by PI Electronics (H.K.) Ltd. Or AD2138620, manufactured by PI Electronics (H.K.) Ltd. Or AD2138U20, manufactured by PI Electronics (H.K.) Ltd. Output: 19 V ⎓ 1.7 A		
Environmental Conditions	Operating Conditions	Temperature	0 °C to 40 °C
		Humidity	Less than 80 %
	Storing Conditions	Temperature	-20 °C to 60 °C
		Humidity	Less than 85 %

Dimensions	Monitor Size (Width x Height x Depth)		
	With Stand (mm)	29U531A : 688.5 x 408.7 x 220.0	29BF550B : 688.5 x 498.3 x 210.0
	Without Stand (mm)	29U531A : 688.5 x 313.4 x 76.9	29BF550B : 688.5 x 313.4 x 45.3
Weight (Without Packaging)	With Stand (kg)	29U531A : 5.2	29BF550B : 6.5
	Without Stand (kg)	29U531A : 4.1	29BF550B : 4.0

The specifications are subject to change without notice.

The symbol ~ means alternating current, and the symbol ⎓ means direct current.

PRODUCT SPECIFICATION

34U530A **34BF550B**

Color Depth	8-bit / 10-bit color is supported.		
Resolution	Max Resolution	2560 x 1080 @ 100 Hz	
	Recommended Resolution	2560 x 1080 @ 60 Hz	
Power Sources	Power Rating	19 V ⎓ 2.5 A	
AC/DC Adapter	DA-48F19, manufactured by Asian Power Devices Inc. Or ADS-48FSK-19 19048EPCU-1, manufactured by SHENZHEN HONOR ELECTRONIC Or ADS-48FSK-19 19048EPK-1, manufactured by SHENZHEN HONOR ELECTRONIC Or ADS-48FSK-19 19048EPG-1, manufactured by SHENZHEN HONOR ELECTRONIC Or ADS-48SQ-19-3 19048E, manufactured by SHENZHEN HONOR ELECTRONIC Or MS-Z2530R190-048M0-E, manufactured by MOSO POWER SUPPLY TECHNOLOGY CO LTD Or MS-V2530R190-048L0-DE, manufactured by MOSO POWER SUPPLY TECHNOLOGY CO LTD Or MS-V2530R190-048L0-KR, manufactured by MOSO POWER SUPPLY TECHNOLOGY CO LTD Or MS-V2530R190-048L0-US, manufactured by MOSO POWER SUPPLY TECHNOLOGY CO LTD Output: 19 V ⎓ 2.53 A		
Environmental Conditions	Operating Conditions	Temperature	0 °C to 40 °C
		Humidity	Less than 80 %
	Storing Conditions	Temperature	-20 °C to 60 °C
		Humidity	Less than 85 %

Dimensions	Monitor Size (Width x Height x Depth)	
	With Stand (mm)	816.5 x 534.2 x 230.0
	Without Stand (mm)	816.5 x 365.3 x 45.5
Weight (Without Packaging)	With Stand (kg)	8.8
	Without Stand (kg)	6.0

The specifications are subject to change without notice.

The symbol ~ means alternating current, and the symbol ⎓ means direct current.

PRODUCT SPECIFICATION

34U511A

Color Depth	8-bit / 10-bit color is supported.		
Resolution	Max Resolution	2560 x 1080 @ 100 Hz	
	Recommended Resolution	2560 x 1080 @ 60 Hz	
Power Sources	Power Rating	19 V ⎓ 1.6 A	
AC/DC Adapter	ADS-45SQ-19-3 19032E, manufactured by SHENZHEN HONOR ELECTRONIC Or ADS-45FSQ-19 19032EPG-1, manufactured by SHENZHEN HONOR ELECTRONIC Or ADS-45FSQ-19 19032EPK-1, manufactured by SHENZHEN HONOR ELECTRONIC Or ADS-45FSQ-19 19032EPCU-1, manufactured by SHENZHEN HONOR ELECTRONIC Or ADS-45FSQ-19 19032EPBR-1, manufactured by SHENZHEN HONOR ELECTRONIC Or ADS-45FSQ-19 19032EPI-1, manufactured by SHENZHEN HONOR ELECTRONIC Or AD10550LF, manufactured by PI Electronics (H.K.) Ltd. Or AD2138S20, manufactured by PI Electronics (H.K.) Ltd. Or AD2138620, manufactured by PI Electronics (H.K.) Ltd. Or AD2138U20, manufactured by PI Electronics (H.K.) Ltd. Output: 19 V ⎓ 1.7 A		
Environmental Conditions	Operating Conditions	Temperature	0 °C to 40 °C
		Humidity	Less than 80 %
	Storing Conditions	Temperature	-20 °C to 60 °C
		Humidity	Less than 85 %

Dimensions	Monitor Size (Width x Height x Depth)	
	With Stand (mm)	816.5 x 486.7 x 220.0
	Without Stand (mm)	816.5 x 365.3 x 45.5
Weight (Without Packaging)	With Stand (kg)	7.6
	Without Stand (kg)	6.0

The specifications are subject to change without notice.

The symbol ~ means alternating current, and the symbol ⎓ means direct current.

PRODUCT SPECIFICATION

29U511A

Color Depth	8-bit / 10-bit color is supported.		
Resolution	Max Resolution	2560 x 1080 @ 100 Hz	
	Recommended Resolution	2560 x 1080 @ 60 Hz	
Power Sources	Power Rating	19 V ⎓ 1.3 A	
AC/DC Adapter	ADS-25SFA-19-3 19025E, manufactured by SHENZHEN HONOR ELECTRONIC Or ADS-25FSF-19 19025EPCU-1, manufactured by SHENZHEN HONOR ELECTRONIC Or ADS-25FSF-19 19025EPBR-1, manufactured by SHENZHEN HONOR ELECTRONIC Or ADS-25FSF-19 19025EPI-1, manufactured by SHENZHEN HONOR ELECTRONIC Or ADS-25FSF-19 19025EPG-1, manufactured by SHENZHEN HONOR ELECTRONIC Or ADS-25FSF-19 19025EPB-1, manufactured by SHENZHEN HONOR ELECTRONIC Or AD10560LF, manufactured by PI Electronics (H.K.) Ltd. Or AD2139S20, manufactured by PI Electronics (H.K.) Ltd. Or AD2139620, manufactured by PI Electronics (H.K.) Ltd. Or AD2183R20, manufactured by PI Electronics (H.K.) Ltd. Or AD2183U20, manufactured by PI Electronics (H.K.) Ltd. Output: 19 V ⎓ 1.3 A		
Environmental Conditions	Operating Conditions	Temperature	0 ℃ to 40 ℃
		Humidity	Less than 80 %
	Storing Conditions	Temperature	-20 ℃ to 60 ℃
		Humidity	Less than 85 %

Dimensions	Monitor Size (Width x Height x Depth)	
	With Stand (mm)	688.5 x 408.7 x 220.0
	Without Stand (mm)	688.5 x 313.4 x 76.9
Weight (Without Packaging)	With Stand (kg)	5.1
	Without Stand (kg)	4.0

The specifications are subject to change without notice.

The symbol ~ means alternating current, and the symbol ⎓ means direct current.

Factory Support Mode (Preset Mode, PC)

HDMI

Resolution	Horizontal Frequency (kHz)	Vertical Frequency (Hz)	Polarity (H/V)	Remarks
640 x 480	31.469	59.940	-/-	
800 x 600	37.879	60.317	+/+	
1024 x 768	48.363	60.004	-/-	
1920 x 1080	67.500	60.000	+/+	
2560 x 1080	66.636	59.978	+/-	HDMI1.4 Preferred timing
2560 x 1080	83.915	74.991	+/-	
2560 x 1080	111.100	100.000	+/-	
2560 x 1440	88.787	59.951	+/-	

DP / USB-C

Resolution	Horizontal Frequency (kHz)	Vertical Frequency (Hz)	Polarity (H/V)	Remarks
640 x 480	31.469	59.940	-/-	
800 x 600	37.879	60.317	+/+	
1024 x 768	48.363	60.004	-/-	
1920 x 1080	67.500	60.000	+/+	
2560 x 1080	66.636	59.978	+/-	DP(USB-C)1.1/1.2/1.4 Preferred timing
2560 x 1080	83.915	74.991	+/-	
2560 x 1080	113.235	99.943	+/-	

HDMI Timing (Video)

Factory support mode (Preset Mode)	Horizontal Frequency (kHz)	Vertical Frequency (Hz)	Remarks
480p	31.5	60	
720p	45.0	60	
1080p	67.5	60	

Power LED

Mode	LED Color
On Mode	White (For a few seconds)
Sleep Mode (Standby Mode)	Off
Off Mode	Off



34BF550B/29BF550B



This Product qualifies for ENERGY STAR®

Changing the factory default configuration and settings or enabling certain optional features and functionalities may increase energy consumption beyond the limits required for ENERGY STAR® certification.

Refer to ENERGYSTAR.gov for more information on the ENERGY STAR® program.

The model and serial number of the product are located on the back and on one side of the product.
Record them below in case you ever need service.

Model _____

Serial No. _____