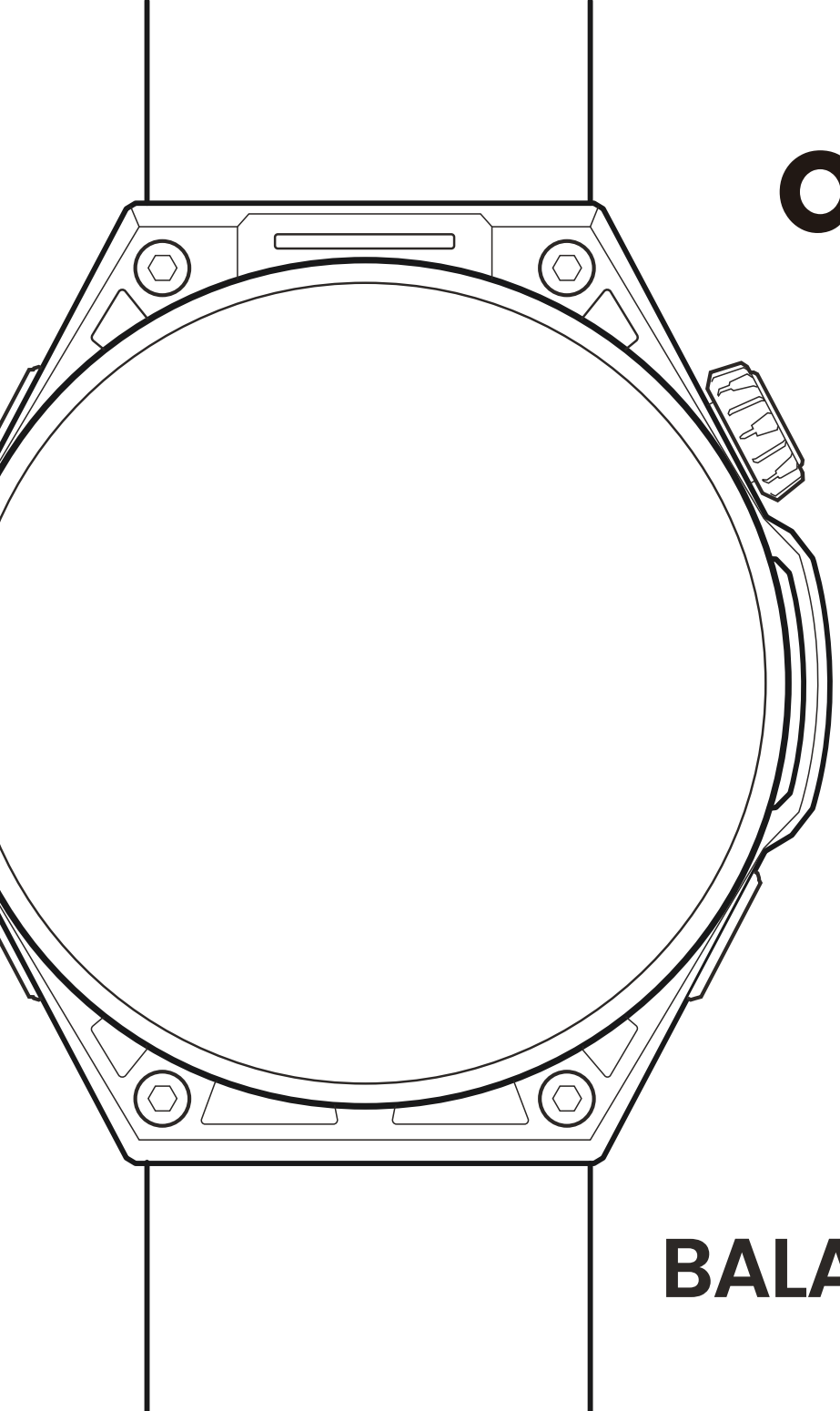

amazfit

BALANCE ULTRA

Package Contents

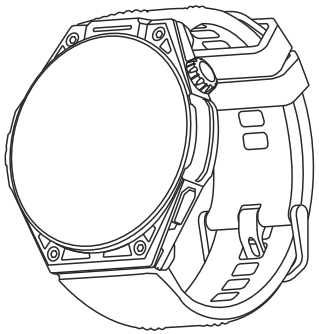

Smartwatch with band

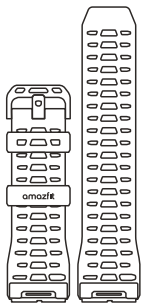

Watch band

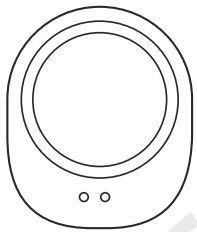

Charging Puck

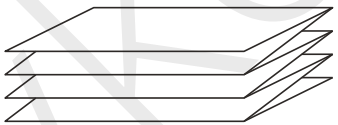

Instruction Manual

About the Watch

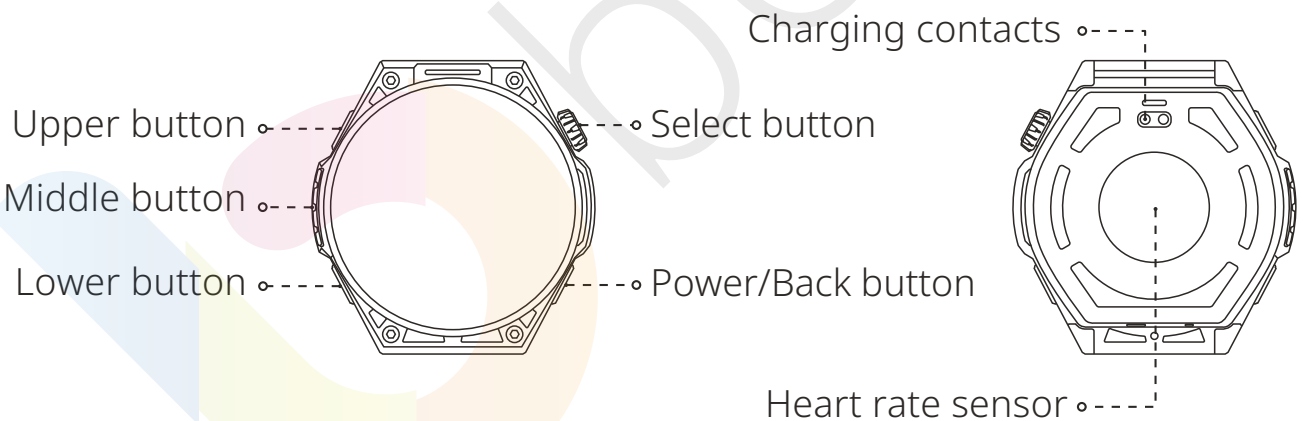

Note: Press and hold the power button to turn on the watch. If the watch cannot be turned on, please charge it and then try again.
Press and hold the middle button to enable system lock or sport lock, and press the middle button briefly to set a shortcut function.

Pairing the Watch

Zepp is a must-have app for this watch. It provides scientific sleep and workout guidance and personalized health services to help you start a healthy lifestyle.

1. Use your mobile phone to scan the QR code on the right side to download and install the app, or search for the app in the Google Play Store or Apple App Store and then download and install the latest version of the app.
2. Open the app, register an account and log in.
3. Pair the watch as prompted by the app.

Download Zepp App

Notes:

1. For better user experience, please use the most recent version of the app.
2. The operating system needs to be Android 7.0, iOS 15.0, or above.
3. Do not pair the watch directly using your mobile phone's Bluetooth. Follow the steps in the app to pair your watch correctly.

Charging the Watch

1. Use a Type-C USB cable to connect the charging base to a power adapter or computer. Ensure a secure connection for proper charging.
2. Put the watch into the charging base. Pay attention to the direction and position of the watch, and make sure that the metal contacts on the back of the watch fit closely with the charging base.
3. When charging starts, the watch screen displays the charging progress.

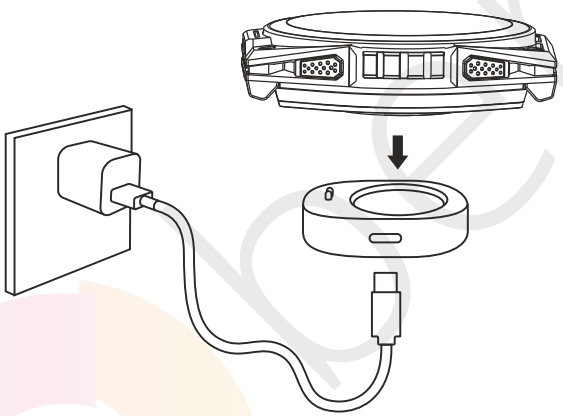

Notes:

1. Please use the charging puck that comes with the watch to charge it. Using other charging puck may affect the charging process. Please ensure the charging puck is dry before charging.
2. To ensure the best charging speed, it is recommended to use a power adapter with a charging current of 1A or above.

Assembling and Disassembling the Watch Strap

1. Take the strap out of the packaging box, ensuring the short strap is on top and the long strap is on the bottom, with the correct orientation.
2. Align the strap pin with the lug hole, insert one end first, then use your finger or a tool to press the spring bar, allowing the other end to snap into the lug hole.
3. After installation, gently pull the strap to ensure it is securely installed.
4. To remove the strap, please refer to the illustration.

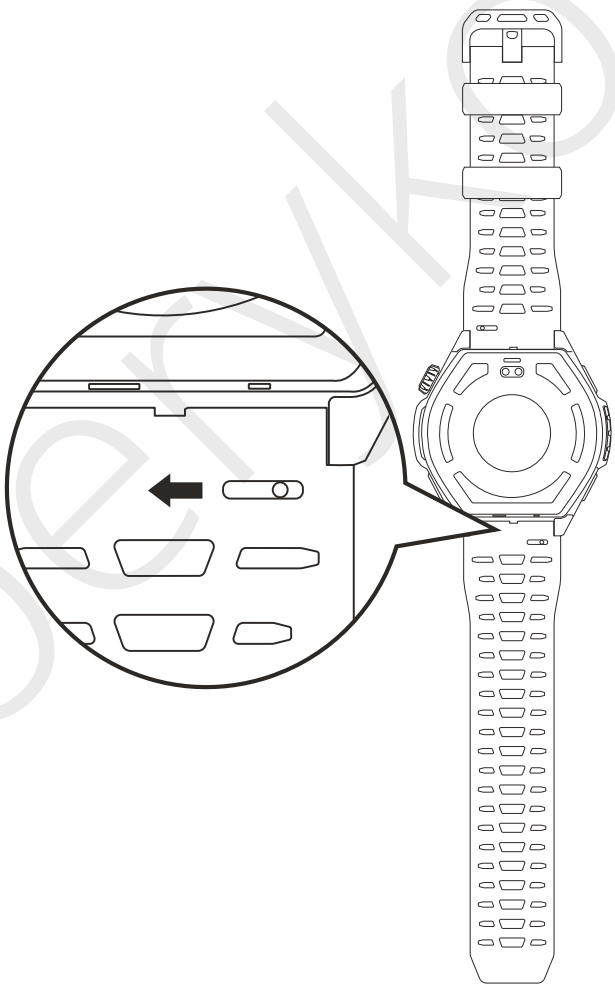

Wearing the Watch

1. To ensure the accuracy of heart rate, blood oxygen, sleep, and other data measurements, wear the device at least one finger away from the wrist bone and keep the strap comfortably snug.
2. For optimal heart rate accuracy during workouts, wear the watch snugly (avoiding wrist movement) and position it at least a finger's width away from your wrist bone. You may slightly loosen the band post-workout for comfort.
3. When measuring blood oxygen saturation, wear the watch correctly. Avoid wearing the watch on the wrist joint, keep your arm flat, maintain comfortable (appropriately tight) fitting between the watch and the skin of your wrist, and keep your arm still throughout the measurement process.

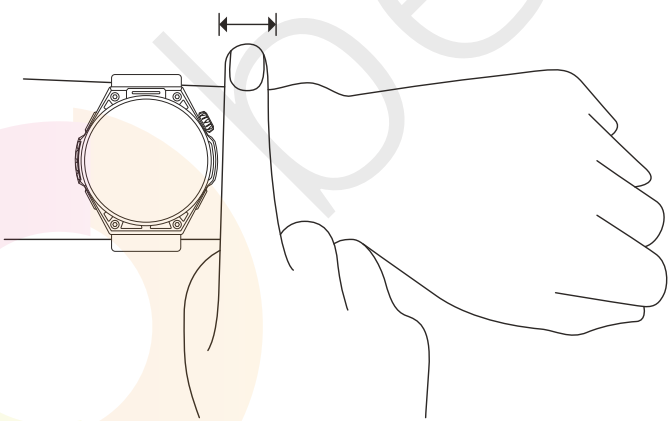

Note:

Factors such as arm sag, arm sway, arm hair, and tattoos can cause measurement inaccuracies.

Basic Parameters

Produktmodell: A2553
Inmatning: DC 5 V 1.5 A MAX
Wi-Fi: 2,4 GHz 802.11 b/g/n
Wi-Fi-frekvens: 2 400–2 483,5 MHz
Wi-Fi-uteffekt: <18 dBm
Bluetooth-version: V5.2
Bluetooth-uteffekt: <13 dBm
BLE-uteffekt: <10 dBm
Visa information om produktcertifiering på sidan Inställningar > System > Reglering på klockan.
GNSS Frekvensområde: 1559-1610 MHz(RX); 1164-1215 MHz(RX)
Drifttemperatur: 0°C – 45°C
Klassificering av vattenbeständighet: 10 ATM
Bluetooth-frekvens: 2 400–2 483,5 MHz
Enhetskrav: Enheter med installerad Android 8.0, iOS 17.0 eller senare operativsystemsversioner

The Bluetooth® word mark and logos are registered trademarks owned by Bluetooth SIG, Inc. and any use of such marks by Anhui Huami Information Technology Co., Ltd. is under license. Other trademarks and trade names are those of their respective owners.

Battery Safety

1. This device is equipped with a built-in battery that cannot be removed or replaced. Do not disassemble or modify the battery by yourself.
2. Disposal of a battery into fire or a hot oven, or mechanically crushing or cutting of a battery, that can result in an explosion.
3. Leaving a battery in an extremely high temperature surrounding environment can result in an explosion or the leakage of flammable liquid or gas.
4. A battery subjected to extremely low air pressure may result in an explosion or the leakage of flammable liquid or gas.
5. Do not use power adapters or data cables that are not properly certified or incompatible, as this may damage the watch and accessories, or cause fire, explosion, or other hazards.

Diving Safety

1. Under normal usage conditions, this device has a maximum diving display depth of 45 meters and is intended only for recreational diving and freediving purposes. It must not be used for technical diving, cave diving, mixed-gas diving, or other high-risk scenarios.

2. The diving features of this device are intended for use by certified divers only. Please ensure you have received professional training and understand how to operate the device before use. General users conducting breath-hold training, breath-hold testing, or engaging in any diving activities must be accompanied by a coach, an experienced dive buddy, or a professional. The device should not be shared among multiple users, as mixed data may pose potential risks.
3. Diving is a high-risk activity. Before beginning, confirm that you are in suitable health to participate. If in doubt, consult a medical professional. Always check the device status before each dive and perform regular maintenance. Do not use the device if any malfunction or damage is found.
4. Avoid rapid ascents. Even if a decompression stop is not required, a safety stop of 3 minutes at a depth of 3–5 meters is strongly recommended.
5. To reduce the risk of decompression sickness, ensure adequate surface interval after diving, especially after recreational dives. Strictly follow the recommended no-fly time and avoid flying before the interval has elapsed. For detailed pre-flight recommendations, please refer to guidelines provided by recognized diving safety organizations.
6. Note that all electronic devices may malfunction. Depth, dive time, ascent rate, and other data provided by the device are for reference only and may be affected by environmental conditions or how the device is used. Always dive with a professional dive computer or other backup device. Do not rely on a single device when making critical decisions, such as planning decompression stops or determining no-fly times.
7. By using this device, you acknowledge and accept that it serves as an auxiliary tool and does not guarantee absolute accuracy or suitability of data, nor can it eliminate the inherent risks associated with diving. Always prioritize safety, make reasonable dive plans, and take responsibility for your personal safety.

Safety Notice

1. Do not allow children or pets to bite or swallow the product or its accessories, as this may cause injury.
2. Do not place this product under excessively high or low temperatures, which may cause the product to catch fire or explode.
3. Do not place this product near heat sources or open flame, such as ovens and electric heaters.
4. Some people may experience allergic skin reactions to plastics, leathers, fibers, and other materials, and symptoms such as redness, swelling, and inflammation will occur after long-term contact with this product's components. If you experience such symptoms, please discontinue use and consult your doctor.
5. Do not use power adapters or data cables that are not properly certified or incompatible, as this may damage the watch and accessories, or cause fire, explosion, or other hazards.
6. The radio waves generated by this product may affect the normal operation of implanted medical devices or personal medical devices, such as pacemakers and hearing aids. If you use any such medical devices, consult the manufacturer for relevant usage restrictions.
7. Do not dispose of this device or its accessories as ordinary household waste. Please make sure you dispose of or recycle this device and its accessories in accordance with local laws and regulations.

Repair and Maintenance

1. Avoid using detergents such as soap, hand sanitizer, bath foam, or lotion for cleaning to prevent chemical residues from irritating the skin, corroding the device, or degrading the water resistance of the device.
2. After wearing the device while bathing (for devices that support bathing), swimming (for devices that support swimming), or sweating, please promptly clean and dry the device.
3. After prolonged wearing, it is recommended to use a soft cloth dipped in clean water to clean the charging contacts, to avoid sweat, sebum, and dirt affecting charging performance.
4. When using light-colored watch straps, avoid contact with dark clothing to prevent staining.
5. The watch is not suitable for use in situations such as hot showers, hot springs, saunas (steam rooms), etc. After the watch comes into contact with seawater, please rinse all the holes with fresh water to prevent seawater residue and crystallization, which may affect the normal use of the watch.
6. Do not place the device in direct sunlight for long periods. Excessively high or low ambient temperature may cause device failure.
7. Handle with care during transportation. Keep the device dry and away from humidity.
8. Do not wear the watch in MRI examinations and other highly magnetic environments. Otherwise, the watch may be damaged.

Warranty and Return Policy

The Amazfit Limited Warranty covers Amazfit products against manufacturing defects beginning on the original purchase date. The warranty period is 12 months or another specified period as the applicable consumer laws in the consumer's country of purchase require. Our warranty is in addition to rights provided by applicable consumer laws.

Official website: www.amazfit.com

Please check the FAQ on the website for troubleshooting: support.amazfit.com/en/product-list

Notes:

- This product isn't a medical device. None of the data or measurements are intended for medical diagnosis or medical monitoring.
- If the product is not in use for a long period of time, it is recommended that you power off the product before storing it. Recharge the battery every 6 months to 100% to prevent battery damage by over-discharge due to long-term storage.

Importer:
Beryko s.r.o.
Pod Vinicemi 931/2, 301 00 Plzeň
www.beryko.cz

beryko