SENCOR®

SVC 8726BK

EN

3-IN-1 STICK VACUUM CLEANER

Translation of the original manual

SENCOR®

SVC 8726BK

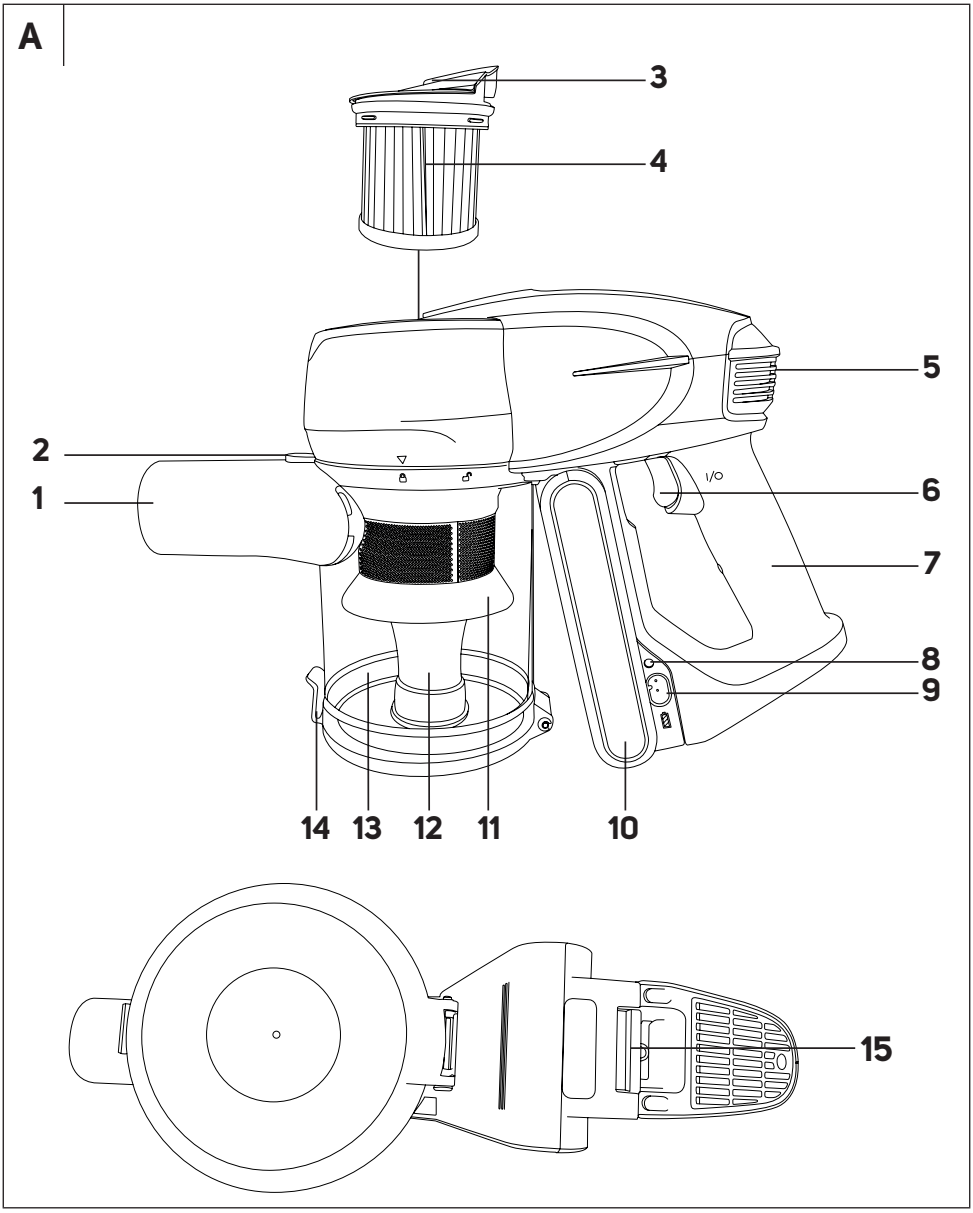
A
3
4
5
2
1
6
7
8
9
14
13
12
11
10
15

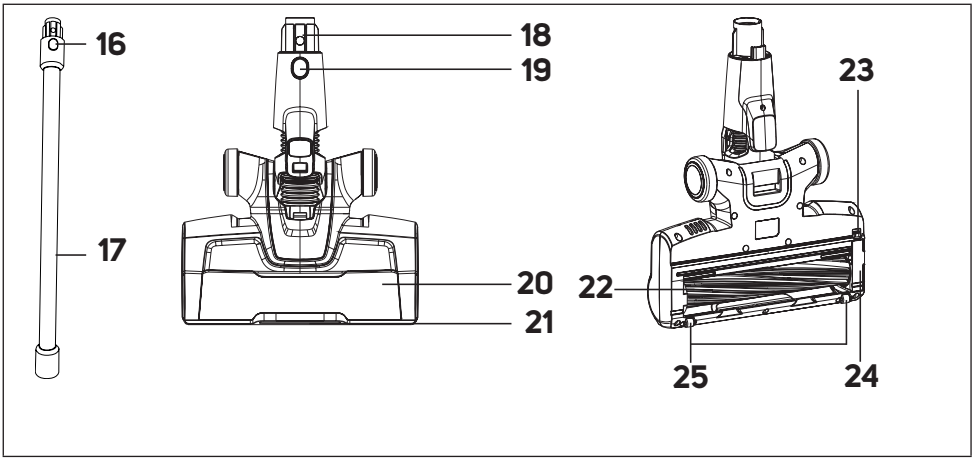
16
17
18
19
20
21
22
23
24
25

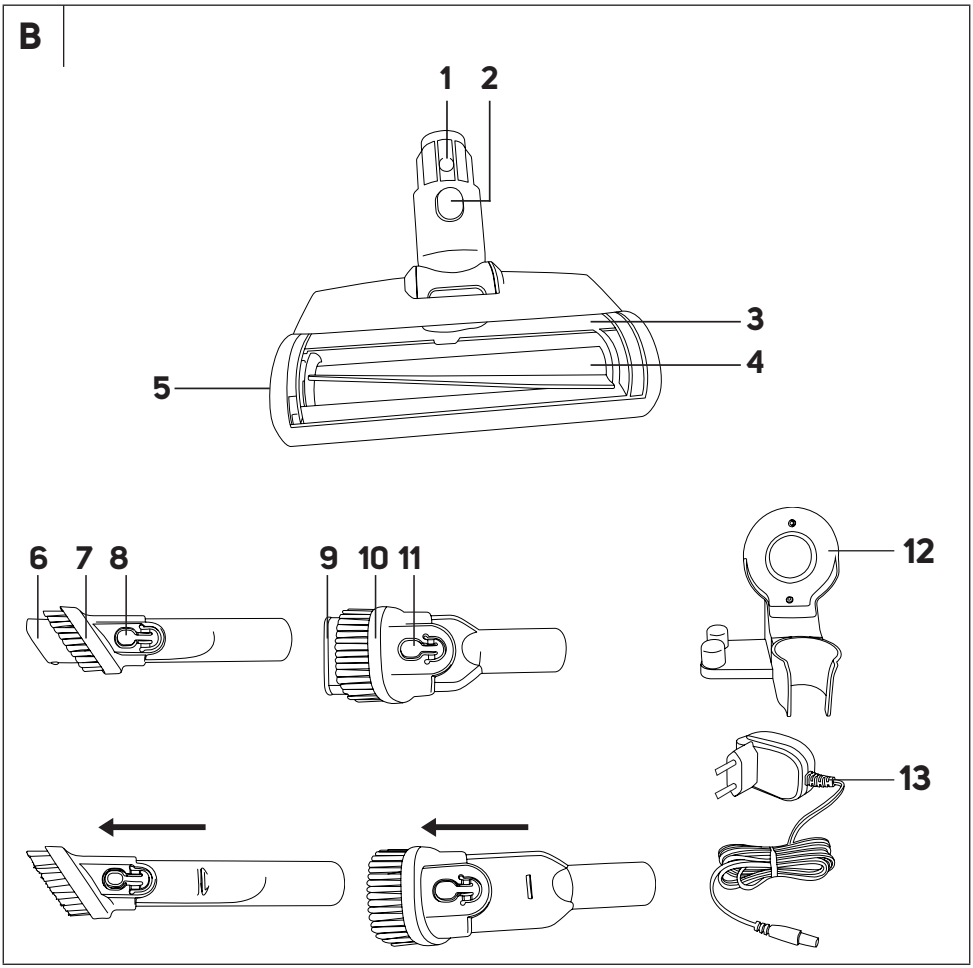
B
1
2
3
4
5
6
7
8
9
10
11
12
13

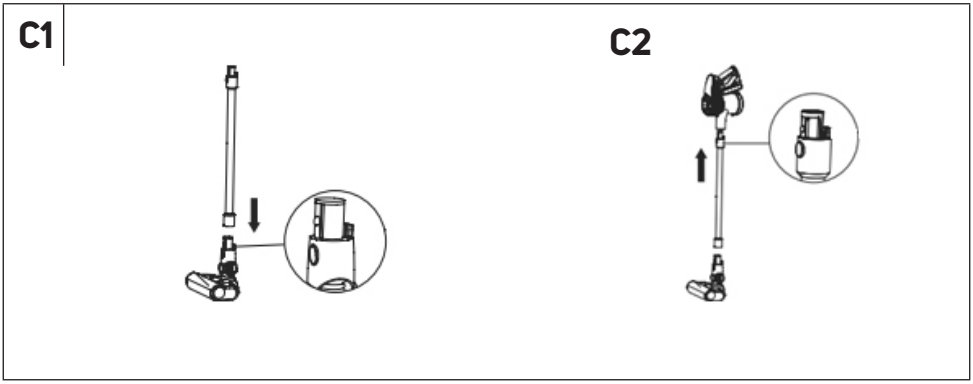
C1
C2

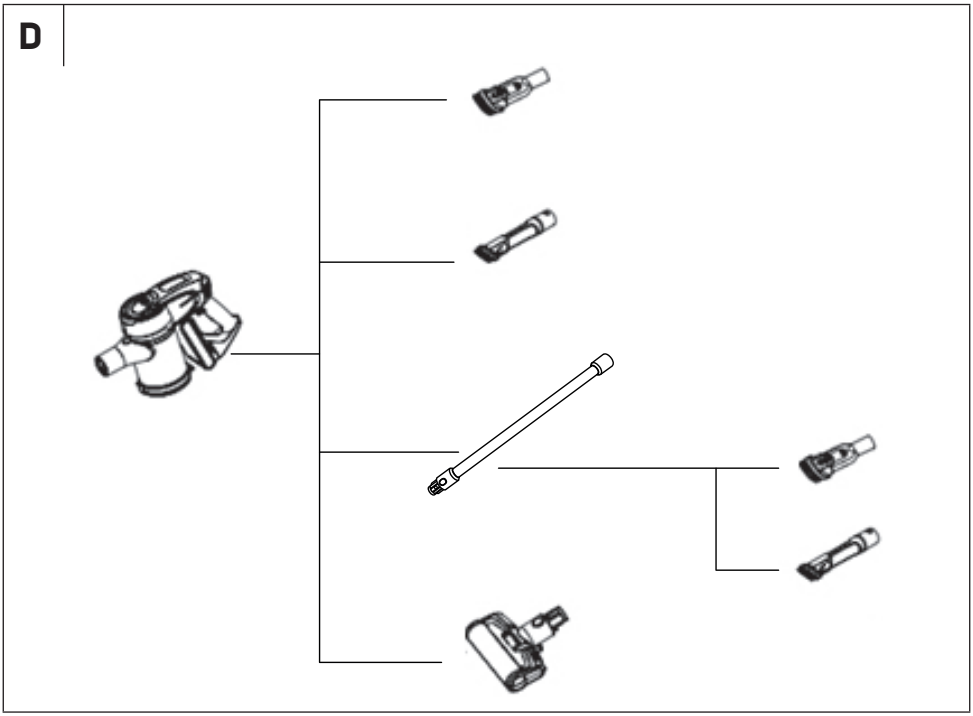
D

E

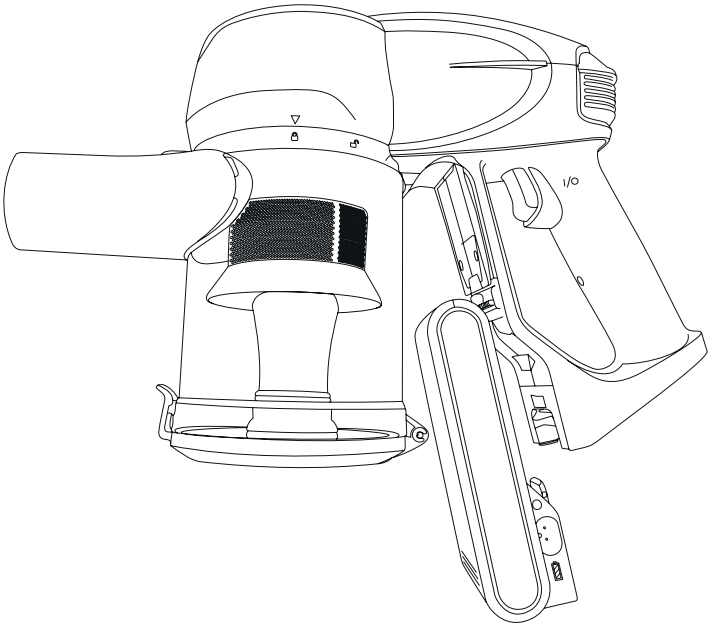

F

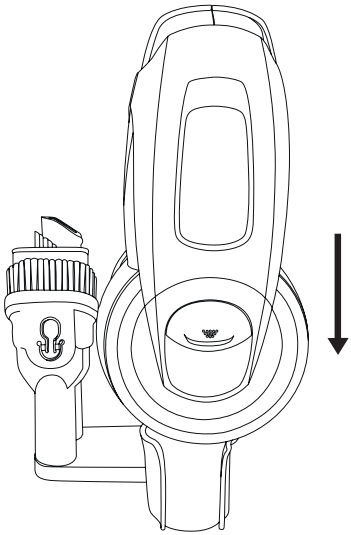

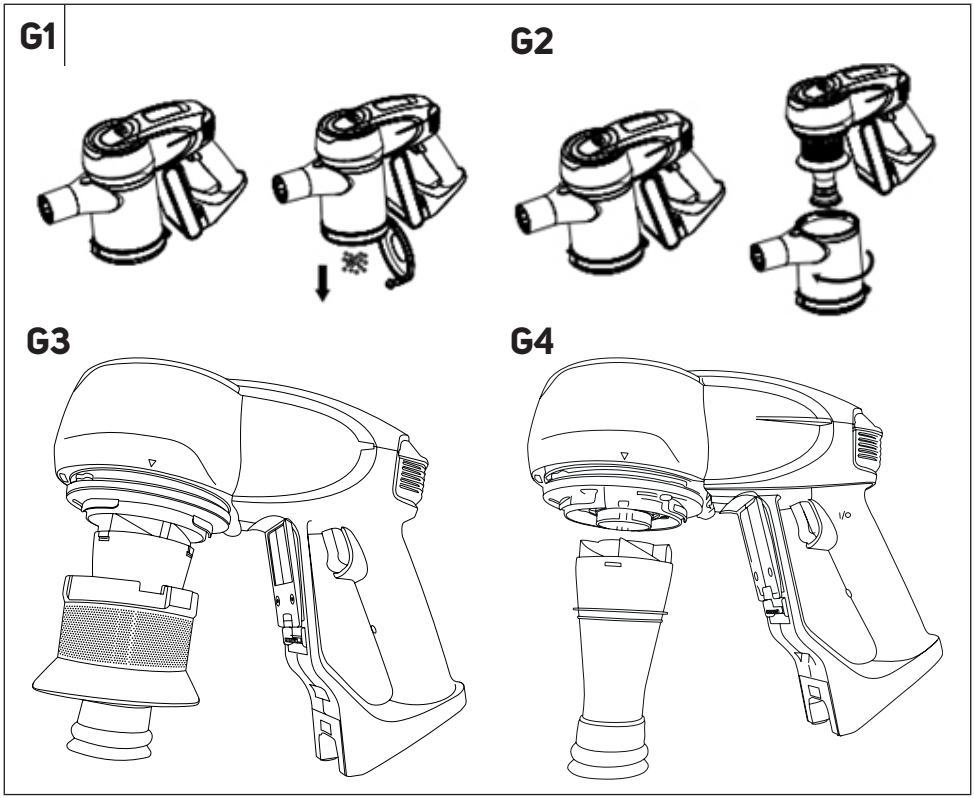
G1
G2
G3
G4
I/O

G5

G6

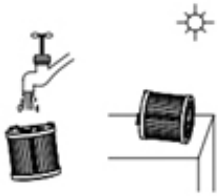

G7

G8

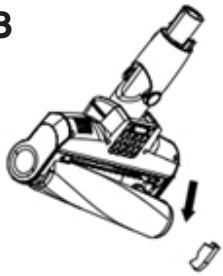

Important safety instructions

READ CAREFULLY AND STORE FOR FUTURE USE.

- This vacuum cleaner may be used by children 8 years of age and older and by persons with reduced physical, sensory or mental impairments or by inexperienced persons, if they are properly supervised or have been informed about how to use this vacuum cleaner in a safe manner and understand the potential dangers.
- Children must not play with the appliance. Cleaning and maintenance performed by the user must not be performed by unsupervised children.
- In the event that the power adapter is damaged, it must be replaced with an original type. For a replacement power adapter, please contact an authorised service centre. It is forbidden to use the appliance if it has a damaged power adapter.

WARNING:
Avoid coming into contact with the rotating parts of the vacuum cleaner's hand accessories. There is a risk of getting caught on these parts and possible injury.

Copyright © 2024, Fast ČR, a.s.

- Only use the vacuum cleaner with the original power adapter, charging base and accessories that were supplied with it.

- This vacuum cleaner is designed for use in households, offices and similar types of areas. Do not use in industrial surroundings.
- Do not expose the vacuum cleaner to direct sunlight and do not place it near an open fire or appliances that are a source of heat.
- Before connecting the adapter to a power socket, check that the technical details on its rating label match the electrical voltage in the power socket.
- Make sure the adapter power cord is not touching a hot surface or sharp objects. Position the adapter power cord so that it will not be tripped over.
- Never submerge the vacuum cleaner, the charging base or the power adapter in water or any other liquid and do not wash it under running water.
- Before turning on the vacuum cleaner, make sure that it is correctly assembled and that all inflow and outflow filters are installed in their place.
- When the vacuum cleaner is running, ensure that the air outlets and the suction opening are not blocked.
- Do not use the vacuum cleaner to vacuum the following items:
  - smouldering cigarettes, burning items, matches or embers;
  - water and other liquids;
  - flammable or volatile materials;
  - sharp items, e.g. broken glass, needles, pins, etc.;
  - flour, wall plaster, cement and other building materials;
  - larger pieces of paper or plastic bags, which can easily block the suction hole.
- Vacuuming of some types of floors or floor surfaces can create an electrostatic discharge, which presents no danger to the user.
- Always turn off the vacuum cleaner when leaving it without supervision, after finishing using it and before cleaning it.
- Disconnect the power adapter from the power socket before cleaning it and after it has finished charging.
- Disconnect the power adapter from the power socket by pulling on the plug, never pulling on the power cord. Otherwise, this could damage the power adapter or the socket.
- If the power adapter is damaged, it must be replaced with an original type. For a replacement power adapter, please contact an authorised service centre.
- Do not use the vacuum cleaner if it is not working correctly, if it has been damaged or has been submerged in water.
- Do not repair the vacuum cleaner yourself or make any adjustments to it. Have all repairs or adjustments performed at an authorised service centre. By tampering with the appliance, you risk voiding your legal rights arising from unsatisfactory performance or quality warranty.

EXPLANATION OF SYMBOLS PLACES ON THE PRODUCT OR IN THE ACCOMPANYING DOCUMENTATION

This product meets all the basic requirements of the applicable EU directives.

This symbol on products or original documents means that used electric or electronic products must not be added to ordinary municipal waste.

Safety class for electrical shock protection:
Class II – Electrical shock protection is provided by double or heavy-duty insulation.

House symbol (domestic use)
The product is intended for household use only. The product is not intended for outdoor use.

Thoroughly read the all the instructions before using the product.

DISPOSAL OF BATTERIES
Prior to disposing of the product or handing it over at a specialised collection facility, it is necessary to ensure that the battery is removed. Before removing the battery, it is necessary to start the vacuum cleaner and wait until it is completely flat. The battery contains environmentally damaging substances and therefore does not belong in standard household waste. Their correct disposal will be performed by the respective collection facility.

Copyright © 2024, Fast ČR, a.s.

EN 3-in-1 stick vacuum cleaner
User's manual

- Thank you for purchasing a SENCOR brand product and we hope that you will be happy with it.
- Prior to using this appliance, please read the user's manual thoroughly, even in cases, when one has already familiarised themselves with previous use of similar types of appliances. Only use the appliance in the manner described in this user's manual. Keep this user's manual in a safe place where it can be easily retrieved for future use.
- We recommend saving the original cardboard box, packaging material, purchase receipt and responsibility statement of the vendor or warranty card for at least the duration of the legal liability for unsatisfactory performance or quality. In the event of transportation, we recommend that you pack the appliance in the original box from the manufacturer.

DESCRIPTION OF THE VACUUM CLEANER

Description of the pump unit

A1 Accessories connection hole
A2 Dust container release button
A3 Cap with inflow filter clip
A4 Inflow filter
A5 Speed setting button
A6 On/Off button
A7 Handle
A8 Battery charging indicator light
A9 Power adapter connection socket
A10 Rechargeable battery
A11 Outflow filter
A12 Tubular filter
A13 Transparent dust container
A14 Button for releasing the bottom of the dust container for fast emptying of dust and dirt
A15 Battery release button
A16 Motor unit release clip
A17 Metal tube
A18 Floor nozzle
A19 Floor nozzle release clip
A20 Protective cover
A21 LED diodes
A22 Electric rotary brush
A23 Lock
A24 Rotary brush removal cover
A25 Travel wheels

DESCRIPTION OF ACCESSORIES

B1 Rotary brush "Cat&Dog Mini" with independent motor
B2 Rotary brush release clip
B3 Protective cover
B4 Rotary brush
B5 Dial lock of rotary brush
B6 Combination crevice nozzle
B7 Crevice nozzle brush
B8 Brush extend/retract button
B9 Combination attachment for upholstery and furniture
B10 Attachment brush
B11 Brush extend/retract button
B12 Holder
B13 Power adapter

Not shown

Dowels
Screws

ASSEMBLING AND DISASSEMBLING THE VACUUM CLEANER

1. Assembling and disassembling the upright vacuum cleaner

- Place the floor nozzle on an even, dry and stable surface. Put the tube on to the floor nozzle in such a way that the connectors in the rear part of the floor nozzle align with the opening inside the tube – see figure **C1**. Push the tube in until you hear a click.
- Insert the outlet hole of the motor unit into the tube in such a way that the connectors in the rear part of the nozzle align with the opening inside the outlet hole – see figure **C2**.
- If you need to disassemble the upright vacuum cleaner, press the motor unit release clip. Then press the floor nozzle release clip.

2. Assembling and disassembling the vacuum cleaner with accessories

- In order to perfectly clean your home, you can attach some of the supplied accessories to the motor unit outlet. Simply remove the accessory by pulling it out of the motor unit outlet. On the rotary brush, first press its release clip.

1) Rotary brush "Cat&Dog Mini" with independent motor
The "Cat&Dog" rotary brush is the suitable for removing animal fur, hair, etc., while at the same time being suitable for vacuuming hard-to-reach places. Its use is not limited to the home, and can be used for vacuuming the car. It quickly and effectively removes hair, animal fur and other materials from car seats, upholstery, pillows and other textile surfaces.

2) Combination crevice nozzle
It is suitable for vacuuming hard to reach places (e.g. windows, corners, book shelves, areas between mattresses, upholstery, etc.). Press and hold down the button and slide out the brush by moving it forward. Retract the brush by pressing the button and moving it backwards.

3) Combination attachment for upholstery and furniture
This attachment is suitable for vacuuming surfaces such as furniture or upholstery. Press and hold down the button and slide out the brush by moving it forward. Thanks to its fine bristles, it is suitable for removing dust and dirt from fine surfaces such as curtains, drapes, etc. Retract the brush by pressing the button and moving it backwards.

Note:
The various options for combining the accessories are shown in figure **D**.

CHARGING THE BATTERY

- The battery can be charged either installed in the motor unit or removed from the motor unit.
- Connect the connector of the power adapter into the socket on the side of the battery and the power adapter plug into a power socket.
- The indicator light will be lit red. As a rule, the first charge takes 5 hours. The battery is charged when the indicator light is lit green. Then disconnect the connector from the socket of the power adapter and pull the plug out of the power socket.
- When you finish cleaning and have cleaned out the appliance, place it back into the stand so that the battery can recharge.
- Keep the charging adapter plugged in permanently. The electronics in the appliance control the battery charging process and ensure that it is always optimally charged. When the battery is fully charged, the electronics interrupt the charging process and resume it when it is necessary to charge the battery again. There is no need to worry about wasting electricity.
- Disconnect the charging adapter from the power socket only in the event of a long term absence. When you return, plug it back into the socket so that the vacuum cleaner is again ready for use.

Note:
When the battery is almost flat, the vacuum cleaner will stop running in order to prevent the battery from discharging fully.
To ensure the long operational lifetime of the battery, we recommend fully charging the battery before first use and to discharge it fully before recharging it again.

Copyright © 2024, Fast ČR, a.s.

INSERTING AND REMOVING THE BATTERY

1. **Inserting the battery:** Carefully turn the motor unit upside down and insert the charged battery so that the grooves on the battery slide into the guide guiding grooves on the motor unit – see figure **E**. Push down on the battery until you hear a click. The battery can only be inserted in one way.

Warning:
Never insert the battery in reverse or by using excessive force. This could damage it.

2. **Removing the battery:** If you need to remove the battery, press the button on the battery that will release it. Carefully pull it out of the motor unit.

Warning:
When not using the vacuum cleaner for an extended period of time, take the battery out of it and store it in a cool, dry location. Regularly recharge the battery. Store the battery away from metal objects to prevent excessive discharging from occurring.

USING THE UPRIGHT VACUUM CLEANER

1 Assemble the upright vacuum cleaner according to the instructions in section "**ASSEMBLING AND DISASSEMBLING THE UPRIGHT VACUUM CLEANER**".
2. Insert the charged battery into the motor unit.
3. Press the On/Off button and the vacuum cleaner will start.
4. The speed of the appliance can be set using the speed setting button. Repeatedly press this button to switch the speeds in the following order:
   I (low speed – provides an extend vacuuming time)
   II (high speed – vacuuming with high power)
   III (turbo speed – vacuuming with maximum power)
5. When you have finished vacuuming, turn the vacuum cleaner off by pressing the On/Off button.

Note:
The electric rotary brush will stop automatically in the event that it is blocked, e.g. by a foreign object or a large amount of hair or fur. This is a safety feature that protects the brush against damage. If this happens, turn the vacuum cleaner off by pressing the On/Off button and remove the jammed object or hair from the brush.

STORING DURING NORMAL USE

- The vacuum cleaner model SVC 8726BK is supplied with a holder that can be mounted on a wall. Select such a location where the holder will be easily accessible with sufficient free space around it.

Mounting the holder on the wall

1. Put the holder against the wall and using a pencil, mark out the locations where it will be necessary to drill holes.
2. Drill two holes and insert dowels into them.
3. Put the holder against the wall and into the holes in the holder insert screws and screw them in using a screwdriver. Check that the holder does not move in any way and that the screws are firmly tightened.

Storing the motor unit and accessories

- The holder is designed to be able to store the motor unit and accessories in it.
- Insert the motor unit and selected accessories that you use most often into the holder, you have two tips available for them – see figure **F**.

CLEANING AND MAINTENANCE

- Always make sure that the vacuum cleaner is turned off before cleaning it. Remove the battery from the motor unit.

Cleaning the motor unit and accessories

- To clean the outer parts of the vacuum cleaner, use a soft cloth dipped in lukewarm water. Do not use aggressive cleaning agents, paint thinners or solvents. Using these solutions could damage the surface of the appliance.

CLEANING THE UPRIGHT VACUUM CLEANER

Emptying the dust container

- It is recommended to always empty out the dust container after every use. If, however, the level of dust and dirt reaches the MAX mark, it is necessary to immediately dump out the dust container.

1. Remove the attached accessory from the motor unit.
2. Take the motor unit over to a garbage bin so that the bottom of the dust container points downwards.
3. Press the bottom release button and the bottom will be released and open up – see figure **G1**.
4. In this way, you will dump the contents of the container directly into the garbage bin.
5. Use your hand to close the bottom of the container. The bottom of the dust container is securely locked in place when you hear a click.

Cleaning the dust container

- Regularly clean the dust container to prevent unpleasant odours from being created**.**

1. Remove the attached accessories from the motor unit and dump out the dust container according to the above mentioned instructions.
2. Press the dust container release button and simultaneously turn the dust container anticlockwise until the arrow on the motor unit points at the symbol. Carefully remove it from the motor unit – see figure **G2**.
3. Wipe the inside walls of the dust container using a soft lightly dampened sponge. Wipe dry using a clean wiping cloth.
4. To release the outer filter, turn it clockwise until the arrow on the filter points at the symbol. Carefully remove it downwards from the motor unit – see figure **G3**. Carefully remove the tubular filter downwards from the motor unit – see figure **G4**.
5. Remove dust and dirt from both filters. If necessary, you can rinse them under clean running water. Then wipe them dry using a clean wiping cloth.

Warning:
Never install the filters if they are wet or damp. Make sure that they are completely dry before installing them.

6. Put the tubular filter on to the motor unit.
7. Put the outer filter on to the motor unit so that the arrow on the filter is aligned with the symbol. Then turn the filter anticlockwise until the arrow on the filter points at the symbol and you hear a click.
8. Put the dust container on to the motor unit so that the arrow on the motor unit points at the symbol . Turn it clockwise until the arrow on the motor unit points at the symbol. The dust container is securely locked in place when you hear a click.

Cleaning and replacing of the inflow filter

- We recommend that the inflow filter is cleaned regularly to ensure the proper operation of the vacuum cleaner. Depending on the frequency of use of the vacuum cleaner, replace the filter every 3 to 6 months.

1. Hold the cover and pull it out upwards.
2. Turn the filter clockwise to release it – see figure **G5**.
3. Tap the filter out over a garbage bin. If the inflow filter is heavily soiled, wash it under clean running water – see figure **G6**. Allow it to dry naturally.
4. Insert the inflow filter into the bottom part of the cover so that the tabs on the filter are aligned with the groves inside the cover. Turn the filter anticlockwise until you feel resistance.
5. Insert the cover with the installed filter into the motor unit.

Cleaning the floor nozzle

- It is necessary to regularly clean the floor nozzle to ensure the required level of continuous suction power.

1. Take the floor nozzle off the vacuum cleaner and turn it upside down.
2. Slide the lock upwards to release the side cover – see figure **G7**. Take it off.
3. Carefully remove the rotary brush – see figure **G8**.
4. Remove any wound on hair, fur and other dirt from the rotary brush. To speed up the removal of wound on hair or fur, you can use scissors.
5. Wipe out the internal area of the floor nozzle using a dry wiping cloth.
6. Insert the clean rotary brush back into the floor nozzle.
7. Finally, put on the side cover.

Cleaning the Cat&Dog brush

- It is necessary to regularly clean the "Cat&Dog Mini" brush to ensure the required level of continuous suction power.

1. Take the rotary brush out off the vacuum cleaner and turn it upside down.
2. Turn the lock to release the brush, and pull it out – see figure **B4/B5**.
3. Remove any wound on hair, fur and other dirt from the brush. To speed up the removal of wound on hair or fur, you can use scissors.
4. Wipe out the internal area of the rotary brush using a dry wiping cloth.
5. Insert the brush back in and turn the lock until you hear a click.

Storage

- When not using the vacuum cleaner, clean it according to the aforementioned instructions and take the battery off the motor unit.
- Before storing it, check that the vacuum cleaner and all its accessories are thoroughly clean and dry.
- Store the appliance in a dry, clean and well-ventilated location not exposed to extreme temperatures and out of children's reach.
- We recommend that you regularly recharge batteries, i.e. every 6 months.

TROUBLESHOOTING

- Before you decide to contact an authorised service centre, please read through the following table:

Problem	Possible cause	Solution
The vacuum cleaner will not turn on.	The battery is flat.	Recharge the battery before using the vacuum cleaner.
	The suction hole is clogged.	Remove dust and dirt from the suction hole.
	The vacuum cleaner is not properly assembled.	Check that all the components are properly assembled.
Suction power is weak	The dust container is full or the filters are dirty.	Empty out the dust container and clean the filters.
	There is a large amount of hair and fur wound on to the rotary brush.	Clean the rotary brush.
The battery has a short lifetime.	The battery is not fully charged.	Recharge the battery.
	The battery is at the end of its lifetime.	Purchase a new battery.

Attention:

If you problem is not specified in the above table or the specified problem continues to persist, stop using the vacuum cleaner, turn it off and contact an authorised service centre.

TECHNICAL SPECIFICATIONS

Power adapter

Input ..... 100 – 240 V~, 50/60 Hz, 1.0 A
Output ..... 30 V ⎓, 0.6 A
Electrical shock protection class II

Vacuum cleaner

Power input ..... 400 W
Electric rotary brush ..... 30 W
Electric Cat&Dog rotary brush ..... 5 W
Battery ..... Li-Ion / 25.2 V ⎓ / 2 500 mAh
Time required for charging to full capacity ..... approximately 4 – 5 h
Operating time when fully charged ..... up to 50 minutes
Noise level ..... ≤ 83 dB(A)
Dust container capacity ..... 0.58 l

The declared noise emission level of the appliance is ≤ 83 dB(A), which represents a level A of acoustic power with respect to a reference acoustic power of 1 pW.

INSTRUCTIONS AND INFORMATION REGARDING THE DISPOSAL OF USED PACKAGING MATERIALS

Dispose of used packaging material at a site designated for waste in your municipality.

DISPOSAL OF USED ELECTRICAL AND ELECTRONIC EQUIPMENT

For proper disposal, renewal and recycling, hand these appliances over to determined collection points. Alternatively, in some European Union states or other European countries you may return your appliances to the local retailer when buying an equivalent new appliance. Correct disposal of this product helps save valuable natural resources and prevents potential negative effects on the environment and human health, which could result from improper waste disposal. Ask your local authorities or collection facility for more details. In accordance with national regulations penalties may be imposed for the incorrect disposal of this type of waste.

For business entities in European Union states

If you want to dispose of electrical or electronic equipment, ask your retailer or supplier for the necessary information.

Disposal in other countries outside the European Union.

If you wish to dispose of this product, request the necessary information about the correct disposal method from the local council or from your retailer.

Changes to text and technical parameters reserved.

Copyright © 2024, Fast ČR, a.s.

FAST ČR, a.s.
U Sanitasu 1621
CZ-251 01 Říčany
www.sencor.eu
info@sencor.com